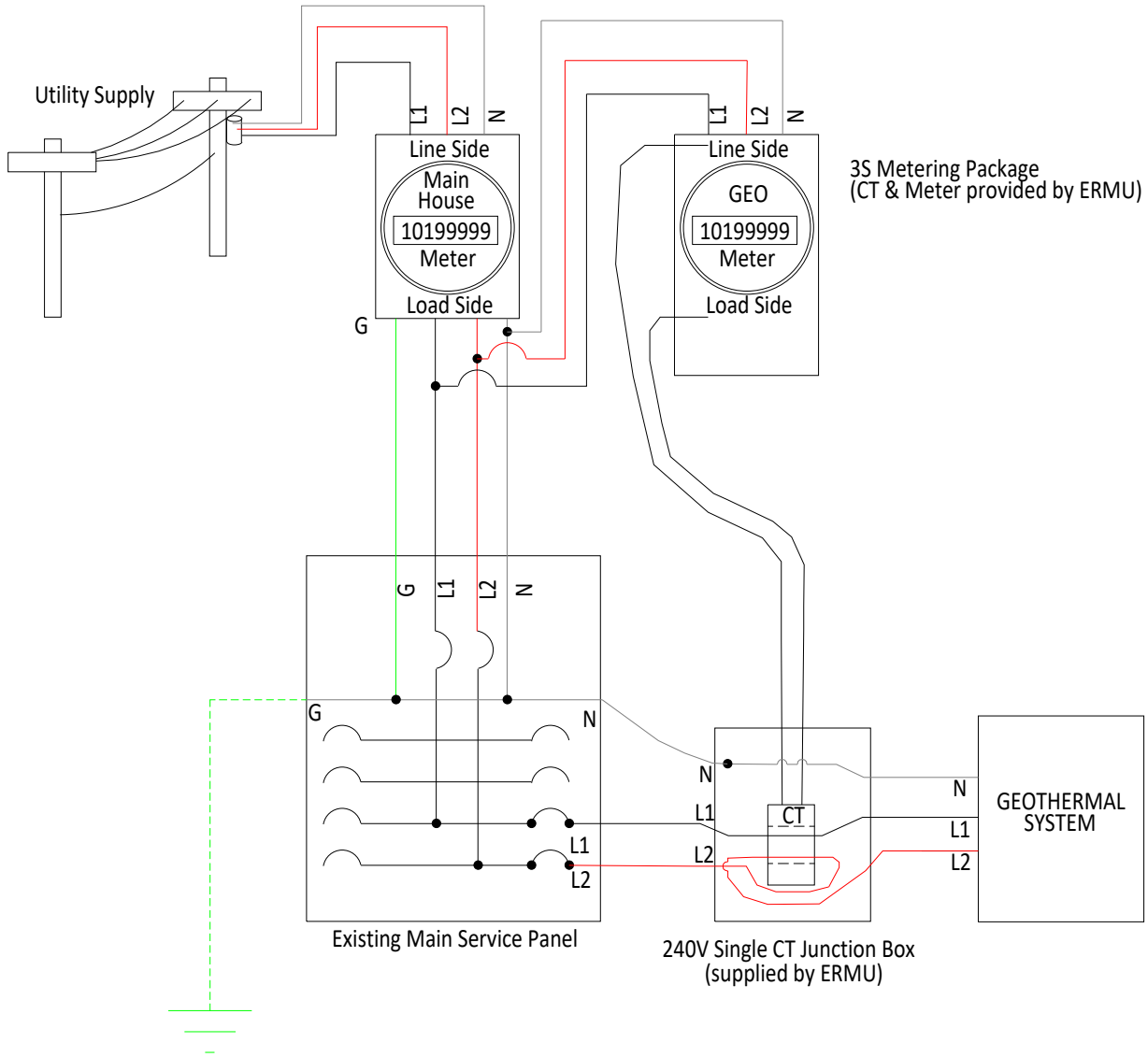

NOTES:

1. DEDUCT METER USED AT APPLICABLE RATE.
2. ALL WIRING MUST MEET NEC REQUIREMENTS AND BE INSPECTED PRIOR TO ERMU INSTALLING A METER.
3. REFER TO EV DIAGRAM FOR SINGLE CIRCUIT GROUND SOURCE HEAT-PUMP INSTALLATIONS.

ONE-LINE DIAGRAM FOR GROUND SOURCE HEAT-PUMP METERING

NOT TO SCALE

Elk River Municipal Utilities

OCTOBER 2020

UQ1.1B2GEO